DWG NO. 5705

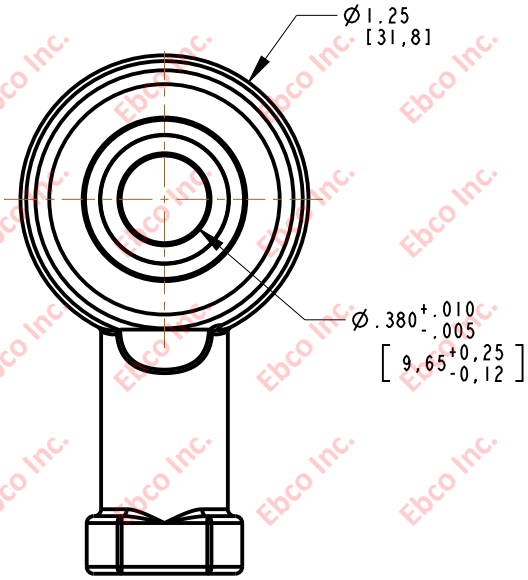

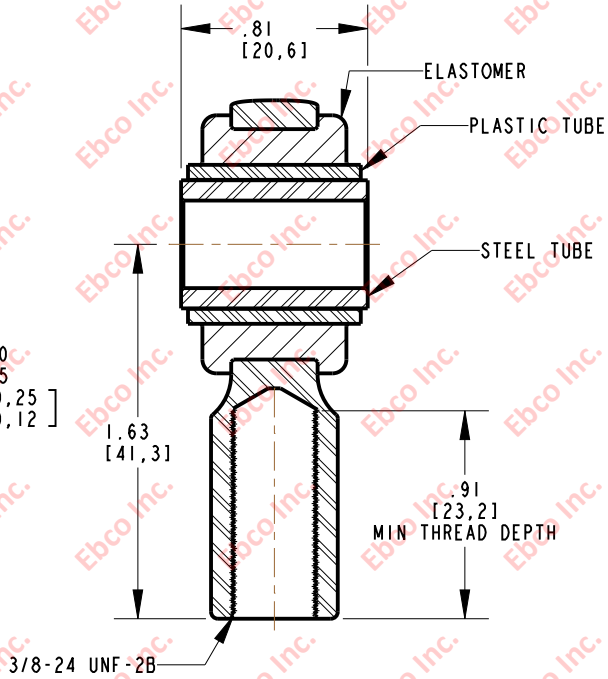

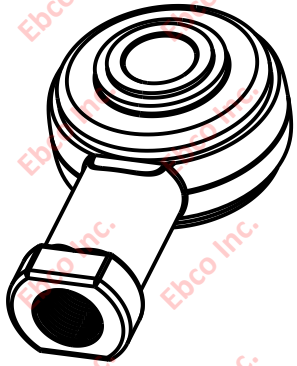

SCALE 1.000

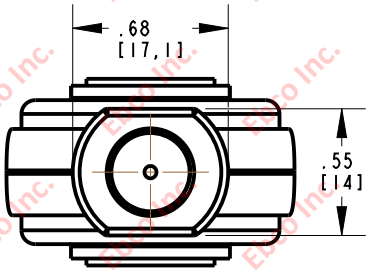

SPECIFICATIONS

PART NO.		DUROMETER (SHORE A)
NATURAL RUBBER	NEOPRENE	
5705-74	5705-84	55
5705-79	5705-89	80

TITLE: 5705

TOLERANCES PER RMA STANDARD A3

REV. B

DATE: 01-06-14

UNITS INCH [MM]

Ebco
1330 HOLMES RD. ELGIN, IL 60123

SPECIFICATIONS SUBJECT TO CHANGE