DWG NO. 5702

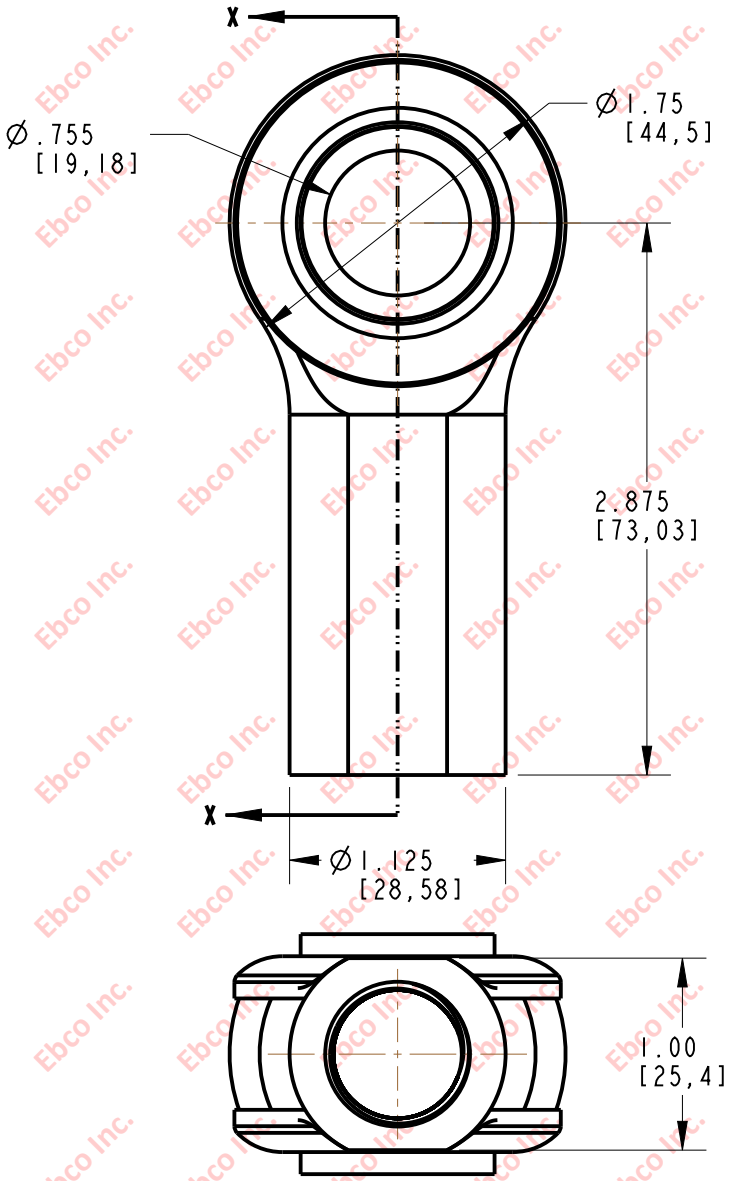

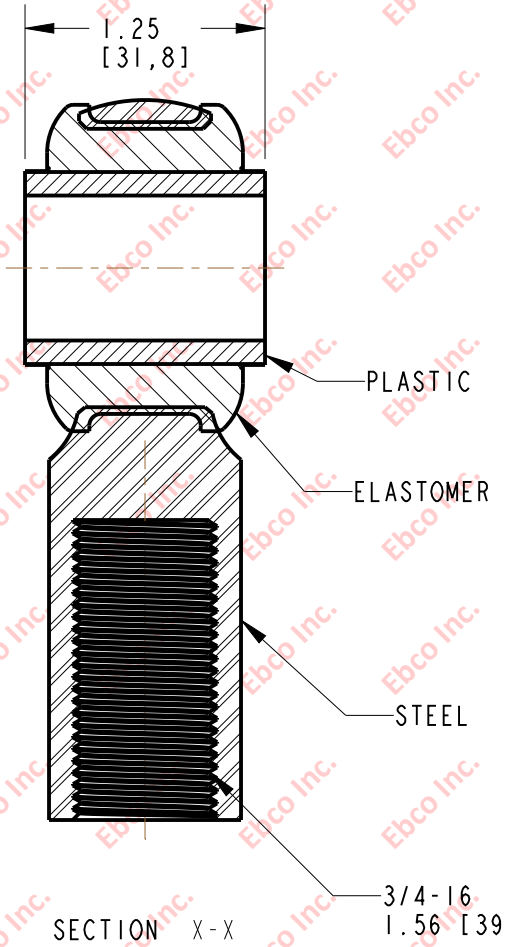

SECTION X-X

SCALE 0.500

SPECIFICATIONS

PART NUMBER		DUROMETER (SHORE A)
NATURAL RUBBER	NEOPRENE	
5702-79	5702-89	80

Ebco

TITLE: 5702

TOLERANCES PER RMA STANDARD A3	REV. B	DATE: 08-26-20
		UNITS INCH [MM]

1330 HOLMES RD. ELGIN, IL 60123

SPECIFICATIONS SUBJECT TO CHANGE