DWG NO. 4621

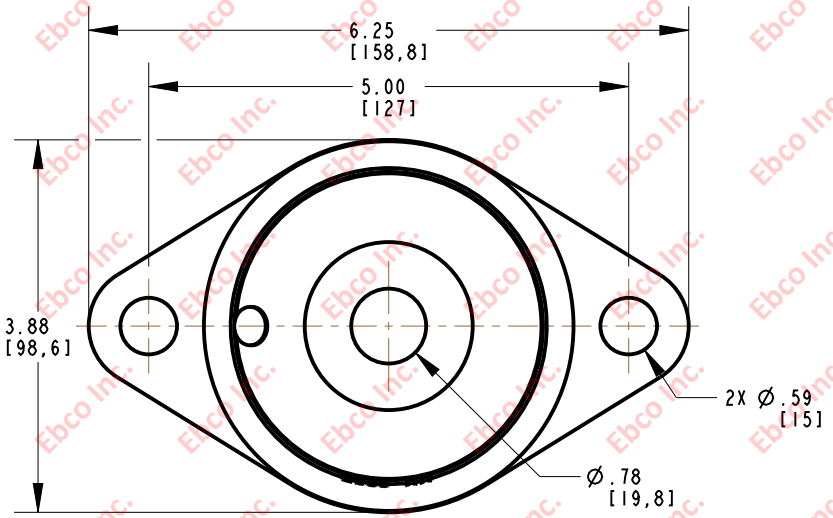

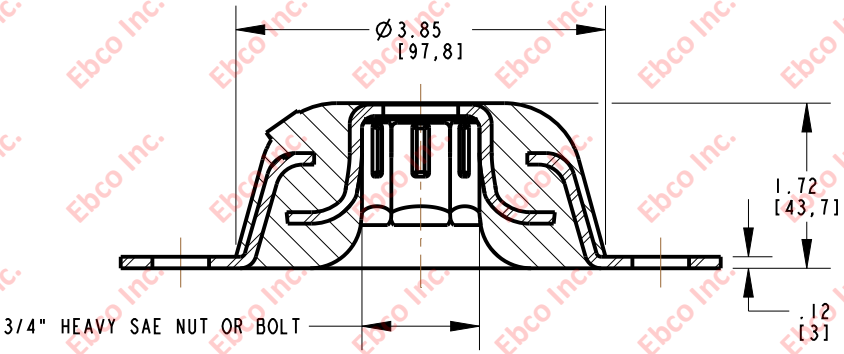

INSTALLATION VIEW (Shown under no load)

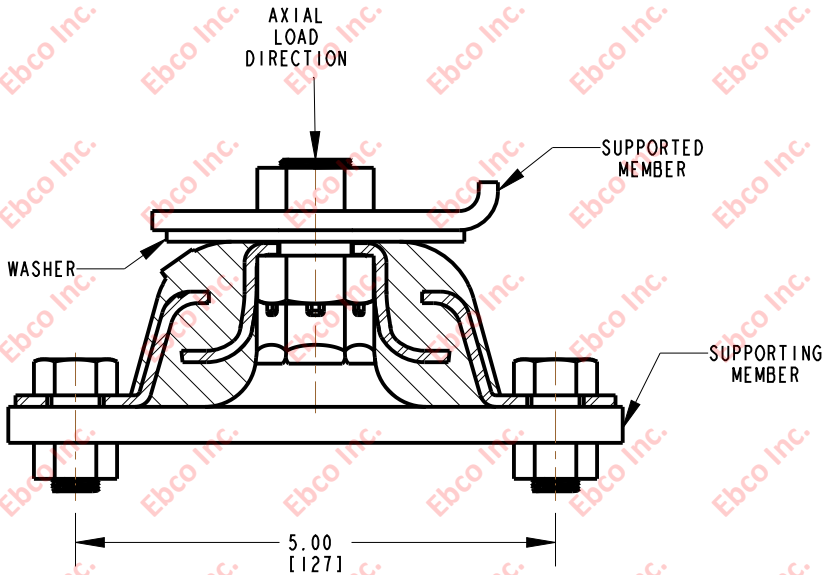

SPECIFICATIONS

PART NUMBER		MAX. AXIAL DEFLECTION		MAX. AXIAL LOAD	
NATURAL RUBBER	NEOPRENE	in	mm	lb	N
4621-70	4621-80	0.125	3.175	650	2891
4621-71	4621-81			750	3337
4621-73	4621-83			1300	5783
4621-75	4621-85			1900	8455
4621-76	4621-86			2250	10012
4621-77	4621-87			2500	11121

TITLE: 4621

THE INFORMATION CONTAINED IN THIS DRAWING IS THE SOLE PROPERTY OF EBCO ANY REPRODUCTION IN PART OR AS A WHOLE WITHOUT THE WRITEN PERMISSION OF EBCO IS PROHIBITED.

TOLERANCES PER RMA STANDARD A3

REV. D

DATE: 01-29-14

UNITS INCH [MM]

Ebco
1330 HOLMES RD. ELGIN, IL 60123

SPECIFICATIONS SUBJECT TO CHANGE