DWG NO. 2362

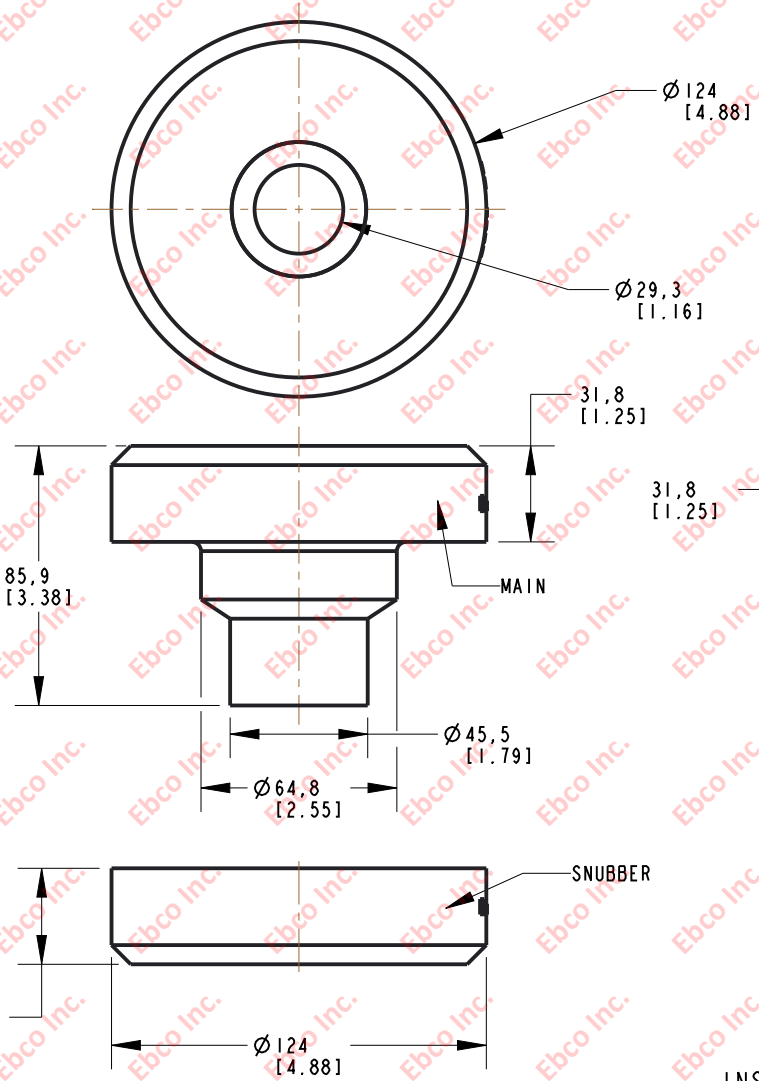

INSTALLATION VIEW (Shown under no load)

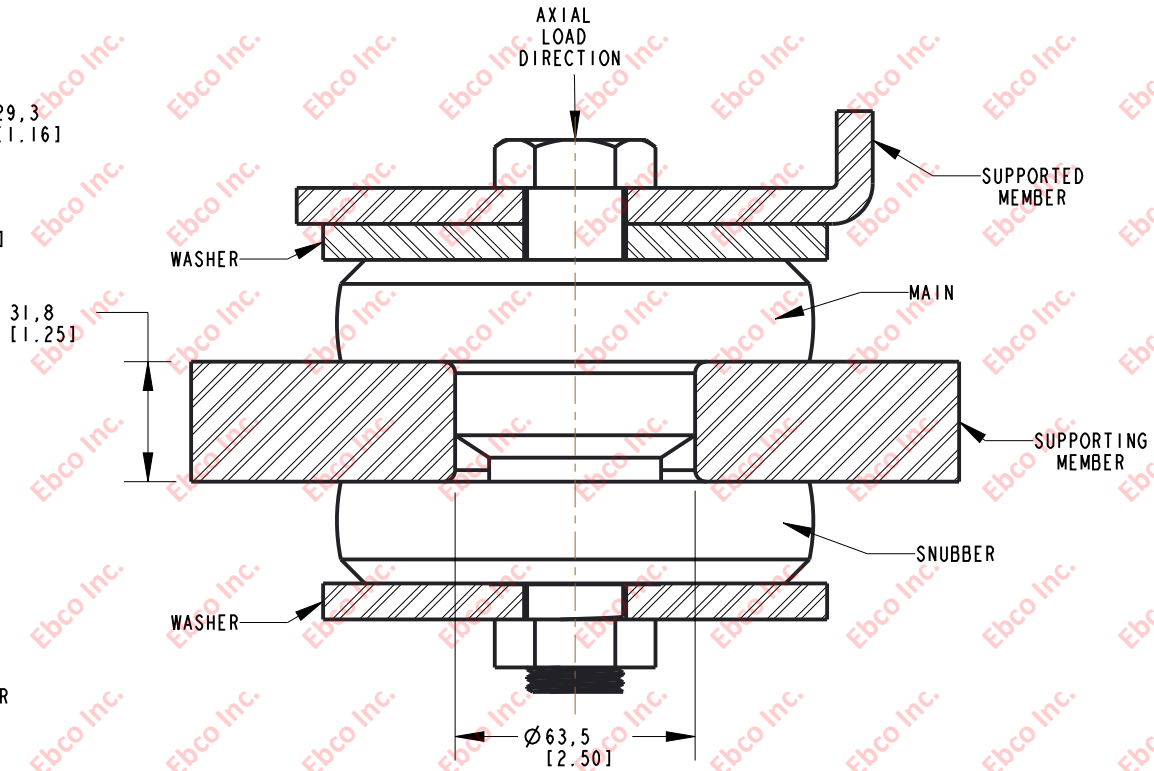

SPECIFICATIONS

PART NUMBER		MAX. AXIAL DEFLECTION		MAX. AXIAL LOAD	
NATURAL	NEOPRENE	in	mm	lb	N
2362-70	2362-80	0.12	3.05	900	4003
2362-71	2362-81			1150	5115
2362-72	2362-82			1500	6672

INSTALLATION DIMENSIONS

RECOMMENDED BOLT INFORMATION				TIGHTENING TORQUE			
ENGLISH		METRIC		CLAMP LOAD		TIGHTENING TORQUE	
SIZE	GRADE	SIZE	CLASS	lb	N	ft-lb	N-m
1-1/8	5	27	9.8	42347	224000	794	1208

WASHER SPECIFICATIONS					
O.D.		I.D.		THICKNESS	
in	mm	in	mm	in	mm
5.25	133	1.063	27.00	.375	9.52

Ebco

TITLE: 2362

TOLERANCES PER RMA STANDARD A3 | REV. E | DATE: 06-09-21 | UNITS mm [INCH]

1330 HOLMES RD. ELGIN, IL 60123

SPECIFICATIONS SUBJECT TO CHANGE