DWG NO. 2345

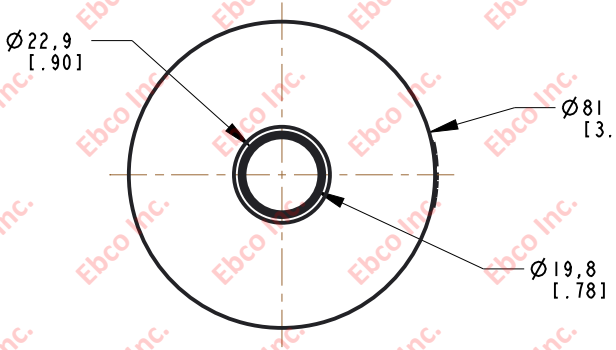

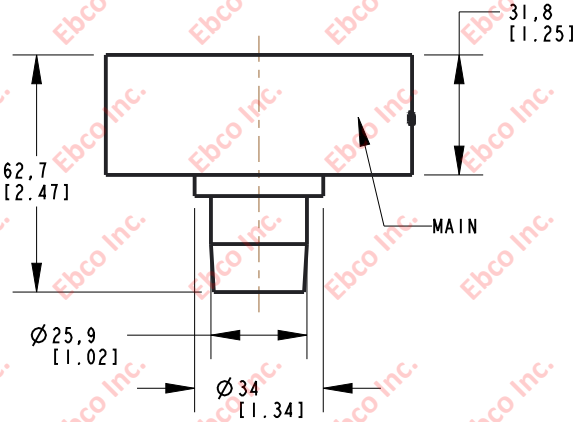

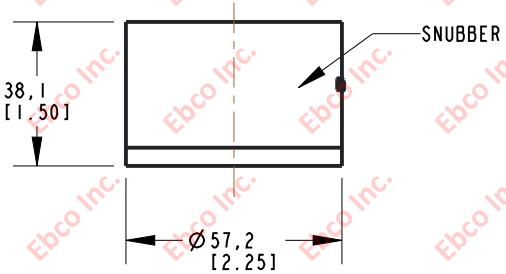

INSTALLATION VIEW (Shown under no load)

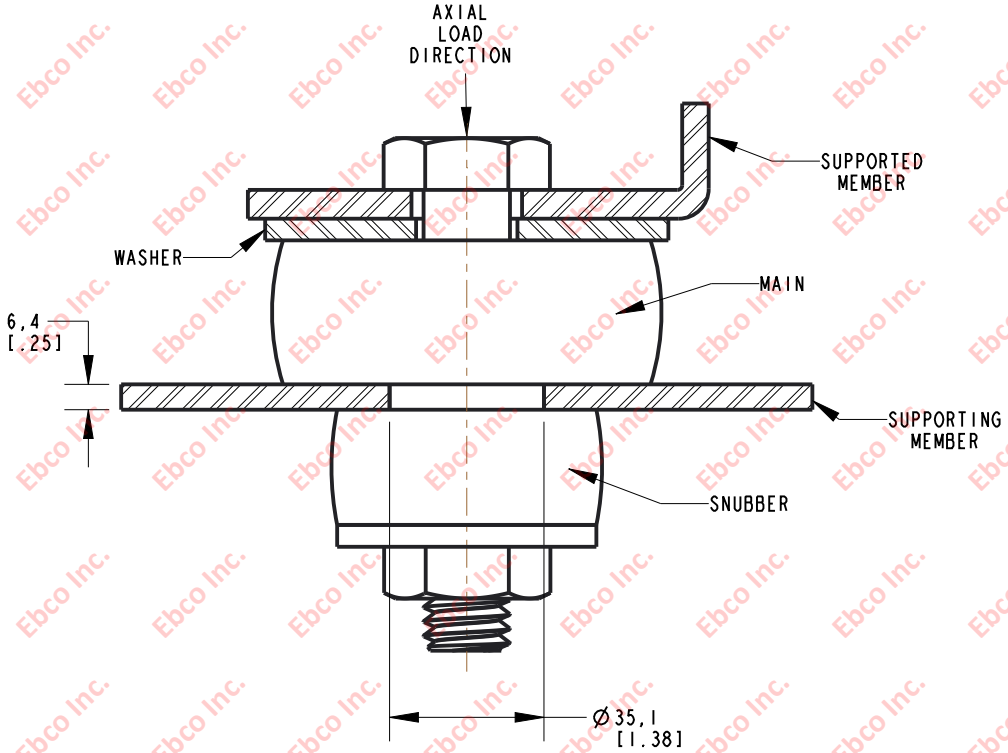

SPECIFICATIONS

PART NUMBER		MAX. AXIAL DEFLECTION		MAX. AXIAL LOAD	
NATURAL RUBBER	NEOPRENE	in	mm	lb	N
2345-71	2345-81	.10	2.54	375	1668
2345-73	2345-83			650	2891
2345-75	2345-85			975	4339
2345-77	2345-87			1400	6228

INSTALLATION DIMENSIONS

RECOMMENDED BOLT INFORMATION				TIGHTENING TORQUE			
ENGLISH		METRIC		CLAMP LOAD		TIGHTENING TORQUE	
SIZE	GRADE	SIZE	CLASS	lb	N	ft-lb	N-m
3/4	2	M18	5.8	8267	54700	103	197

WASHER SPECIFICATIONS					
O.D.		I.D.		THICKNESS	
in	mm	in	mm	in	mm
3.50	88.90	.80	20.3	.188	4.78

Ebco

TITLE: 2345

TOLERANCES PER RMA STANDARD A3 | REV. E | DATE: 06-09-21 | UNITS: mm [INCH]

1330 HOLMES RD. ELGIN, IL 60123

SPECIFICATIONS SUBJECT TO CHANGE