DWG NO. 2338

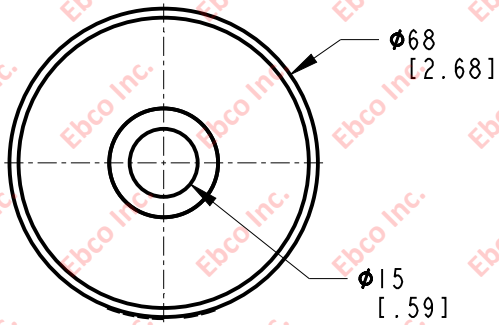

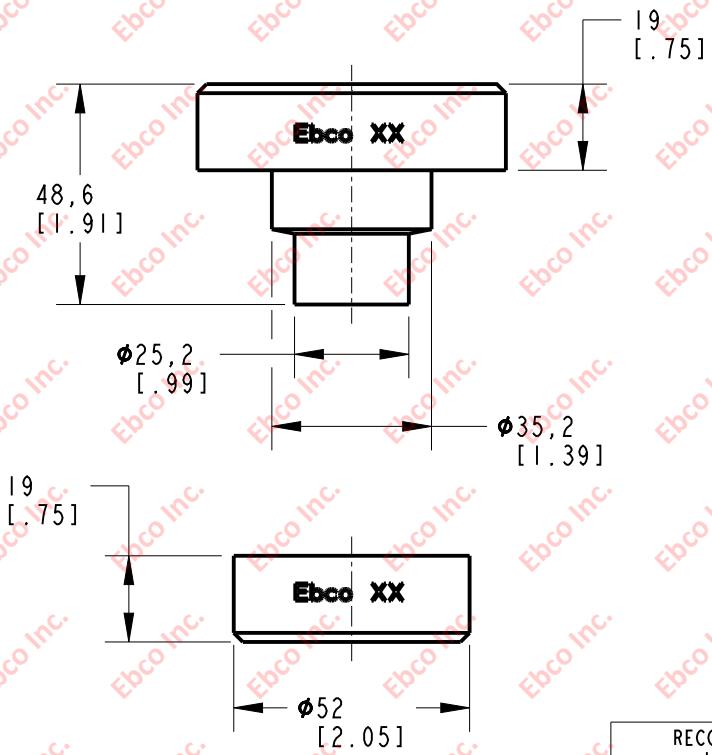

INSTALLATION VIEW (Shown under no load)

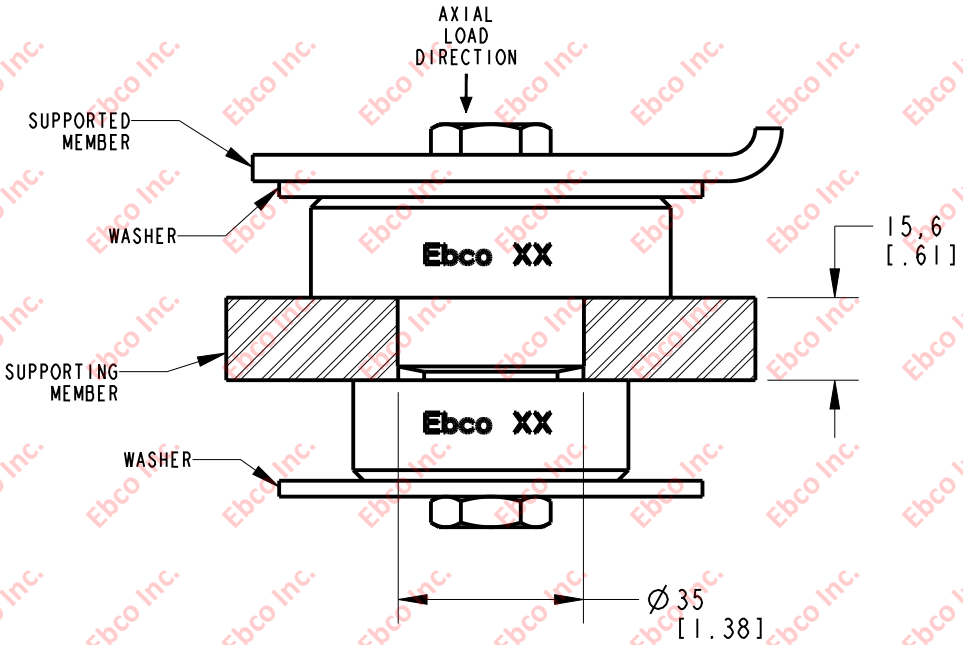

SPECIFICATIONS

PART NUMBER		MAX. AXIAL DEFLECTION		MAX. AXIAL LOAD	
NATURAL RUBBER	NEOPRENE	mm	in	N	LB
2338-75	2338-85	1,9	.07	2669	600
2338-76	2338-86			3336	750
2338-77	2338-87			4115	925

RECOMMENDED BOLT INFORMATION				TIGHTENING TORQUE			
METRIC		ENGLISH		CLAMP LOAD		TIGHTENING TORQUE	
SIZE	CLASS	SIZE	GRADE	N	lb	ft-lb	N-m
M14	10,9	9/16	8	71600	16380	154	200

WASHER SPECIFICATIONS					
O.D.		I.D.		THICKNESS	
mm	in	mm	in	mm	in
80,0	3.15	15,0	0.59	3,0	0.12

TITLE: 2338

TOLERANCES PER RMA STANDARD A3 | REV. A | DATE: 07-21-22 | UNITS mm [INCH]

Ebco
1330 HOLMES RD. ELGIN, IL 60123

SPECIFICATIONS SUBJECT TO CHANGE