DWG NO. 2333A

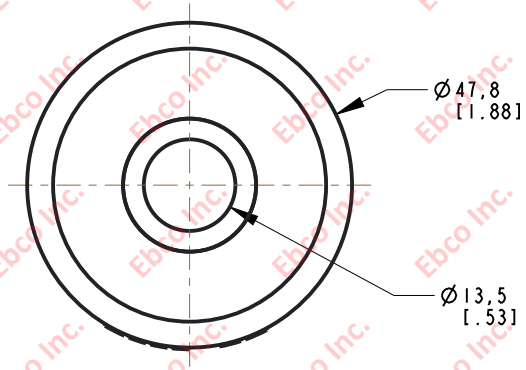

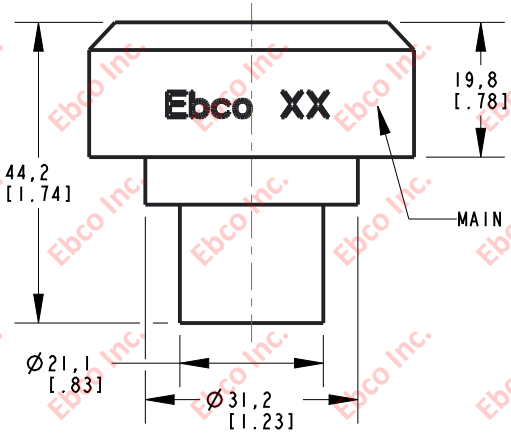

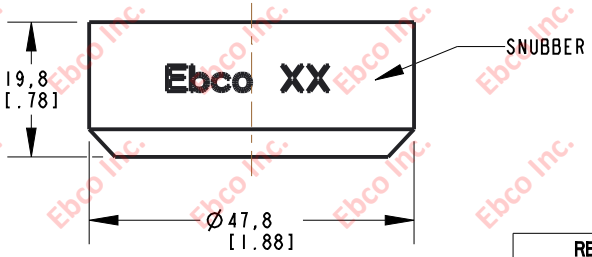

INSTALLATION VIEW (Shown under no load)

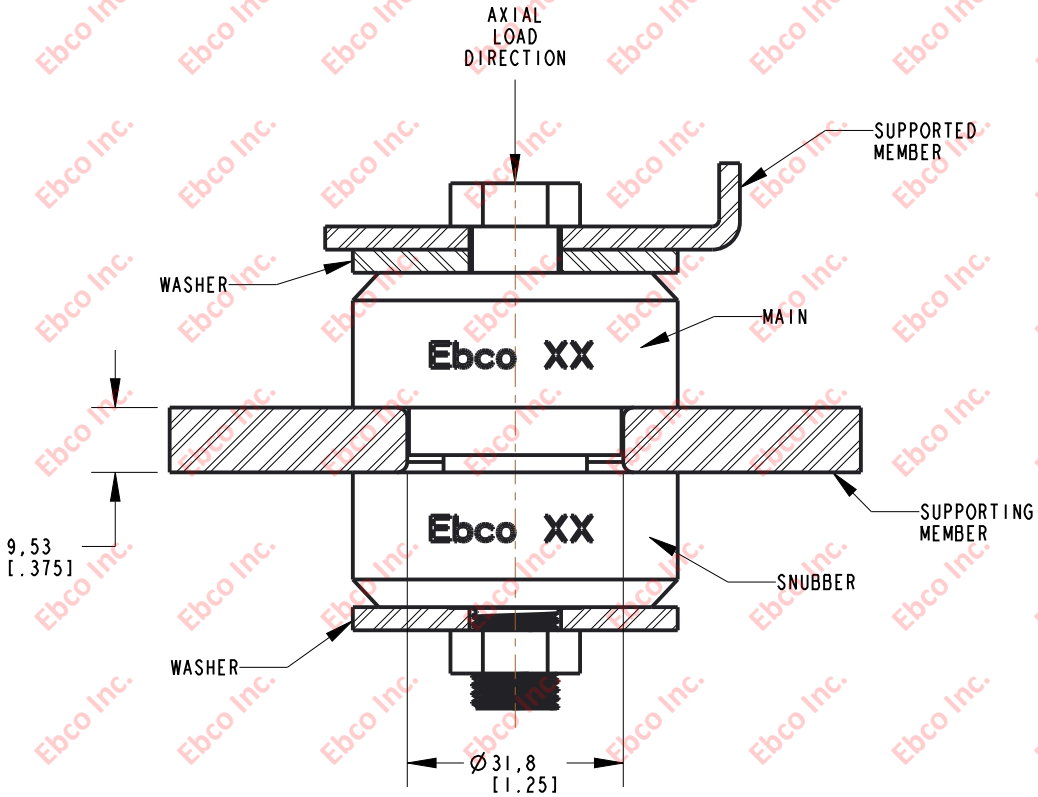

SPECIFICATIONS

PART NUMBER		MAX. AXIAL DEFLECTION		MAX. AXIAL LOAD	
NATURAL RUBBER	NEOPRENE	in	mm	lb	N
2333A-70	2333A-80	.07	1.78	160	712
2333A-71	2333A-81			190	845
2333A-73	2333A-83			260	1157
2333A-77	2333A-87			600	2669

INSTALATION DIMENSIONS

RECOMMENDED BOLT INFORMATION				TIGHTENING TORQUE			
ENGLISH		METRIC		CLAMP LOAD		TIGHTENING TORQUE	
SIZE	GRADE	SIZE	CLASS	lb	N	ft-lb	N-m
1/2	5	M12	9.8	9046	40239	75.4	101.8

WASHER SPECIFICATIONS					
O.D.		I.D.		THICKNESS	
in	mm	in	mm	in	mm
2.13	54.10	.53	13.46	.134	3.40

Ebco

TITLE: 2333A

TOLERANCES PER RMA STANDARD A3

REV. E

DATE: 04-10-23

UNITS mm [INCH]

1330 HOLMES RD. ELGIN, IL 60123

SPECIFICATIONS SUBJECT TO CHANGE