DWG NO. 2325A

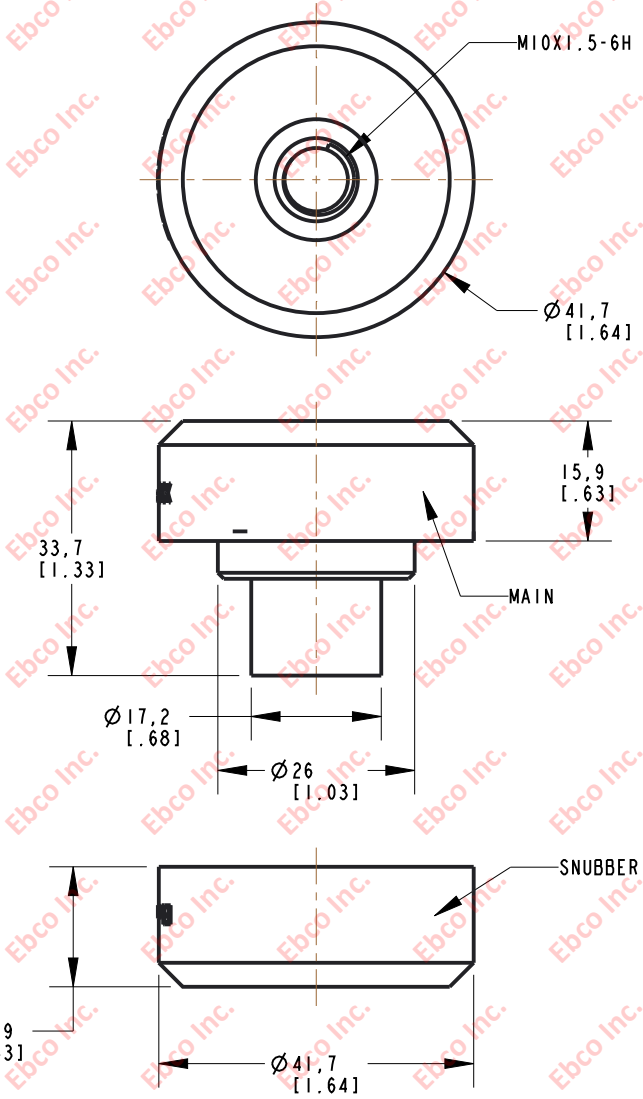

INSTALLATION VIEW (Shown under no load)

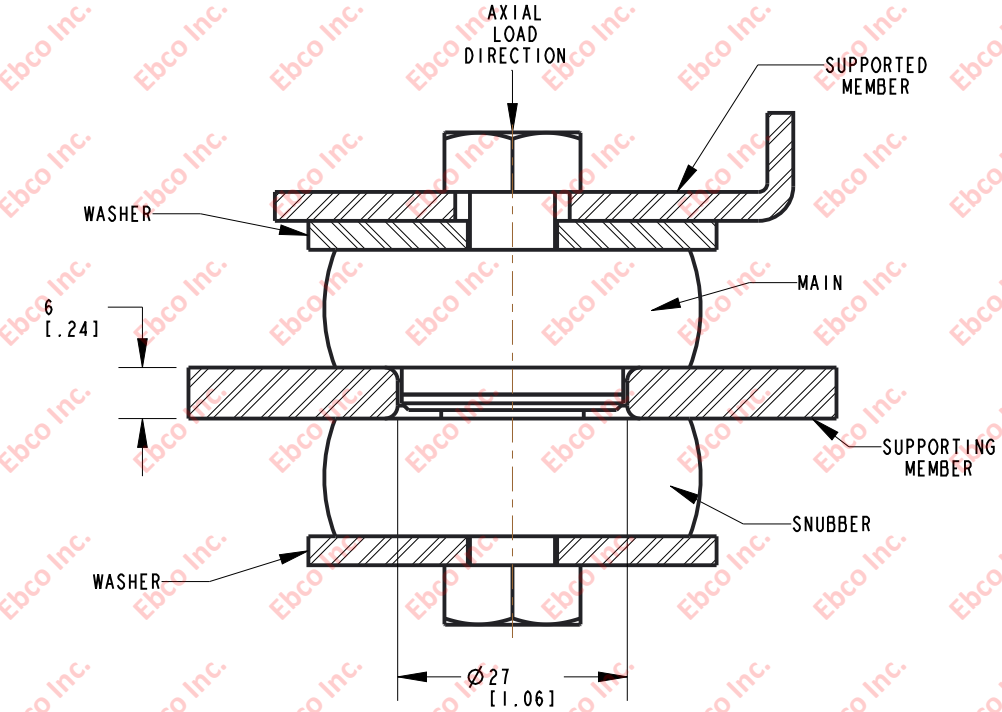

RECOMMENDED BOLT INFORMATION		TIGHTENING TORQUE			
METRIC		CLAMP LOAD		TIGHTENING TORQUE	
SIZE	CLASS	lb	N	ft-lb	N-m
M10	9.8	6362	28300	41.7	56,5

PART NUMBER		MAX. AXIAL DEFLECTION		MAX. AXIAL LOAD	
NATURAL RUBBER	NEOPRENE	in	mm	lb	N
2325A-75	2325A-85	0.06	1,52	260	1156
2325A-76	2325A-86			325	1446
2325A-77	2325A-87			410	1824

WASHER SPECIFICATIONS					
O.D.		I.D.		THICKNESS	
in	mm	in	mm	in	mm
1.88	48,0	.41	10,5	.134	3,40

Ebco

TITLE: 2325A

TOLERANCES PER RMA STANDARD A3 | REV. B | DATE: 07-19-21 | UNITS: mm [INCH]

1330 HOLMES RD. ELGIN, IL 60123

SPECIFICATIONS SUBJECT TO CHANGE