DWG NO. 2315

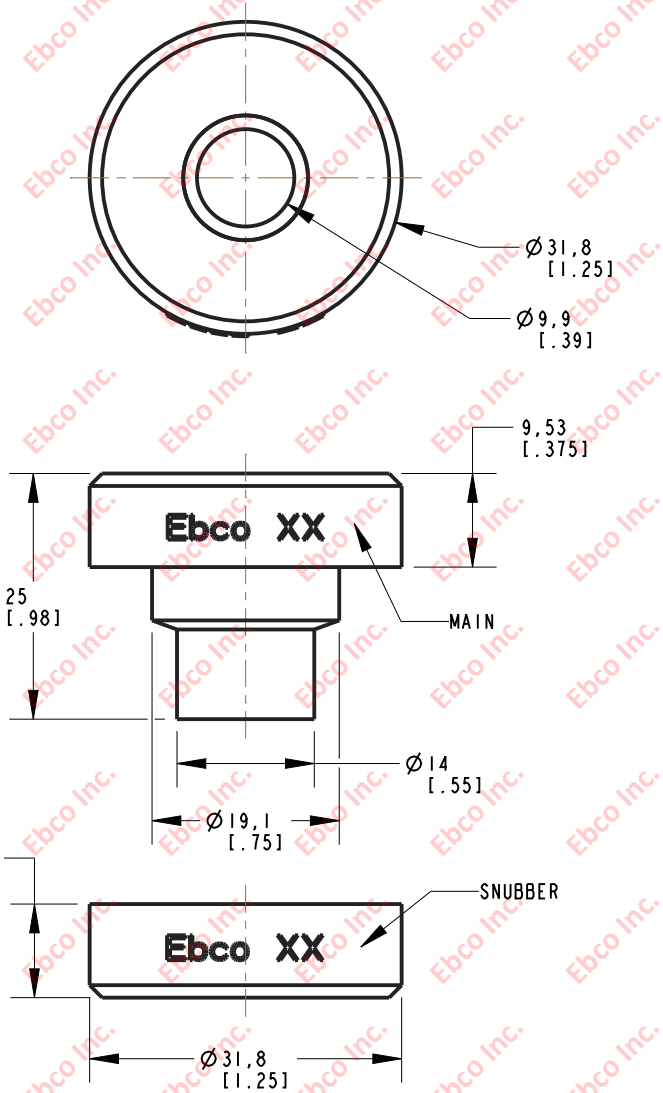

INSTALLATION VIEW (Shown under no load)

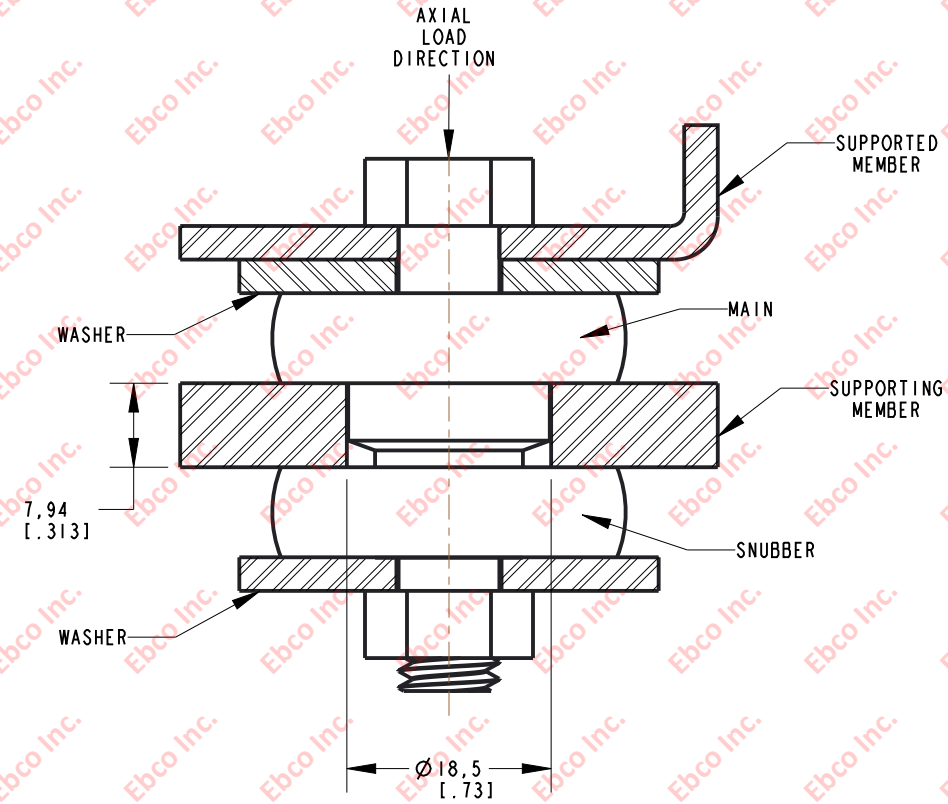

SPECIFICATIONS

PART NUMBER		MAX. AXIAL DEFLECTION		MAX. AXIAL LOAD	
NATURAL RUBBER	NEOPRENE	in	mm	lb	N
2315-700	2315-800	.03	0.76	40	178
2315-71	2315-81			60	267
2315-73	2315-83			95	423
2315-75	2315-85			140	623
2315-76	2315-86			170	756

INSTALLATION DIMENSIONS

RECOMMENDED BOLT INFORMATION				TIGHTENING TORQUE			
ENGLISH		METRIC		CLAMP LOAD		TIGHTENING TORQUE	
SIZE	GRADE	SIZE	CLASS	lb	N	ft-lb	N-m
3/8	2	M8	5.8	3197	10400	20.0	16.7

WASHER SPECIFICATIONS					
O.D.		I.D.		THICKNESS	
in	mm	in	mm	in	mm
1.56	39.62	.391	9.93	.125	3.18

Ebco

TITLE: 2315

TOLERANCES PER RMA STANDARD A3 | REV. F | DATE: 06-09-21 | UNITS mm [INCH]

1330 HOLMES RD. ELGIN, IL 60123

SPECIFICATIONS SUBJECT TO CHANGE