DWG NO. 2306

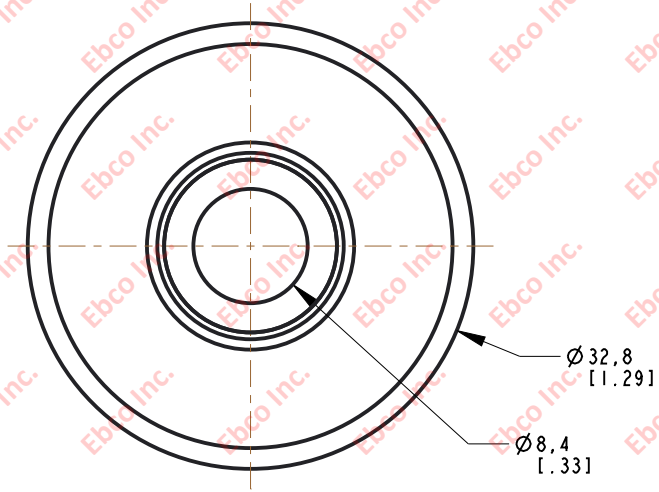

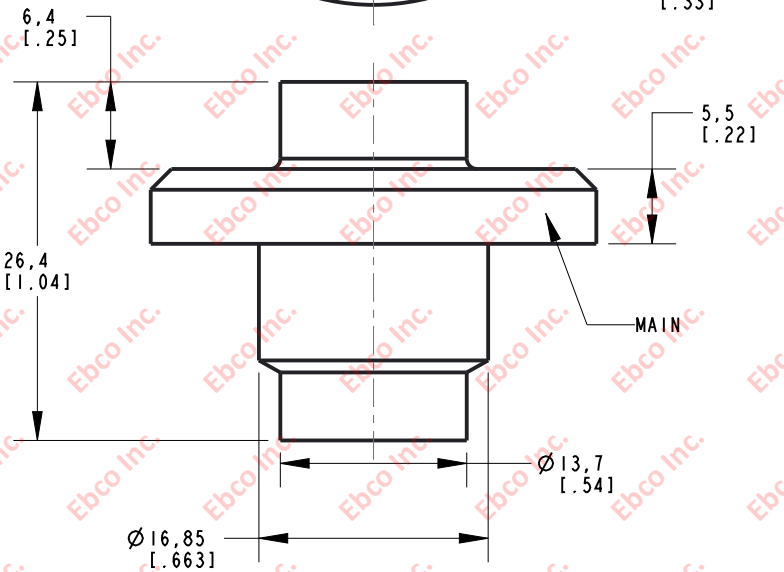

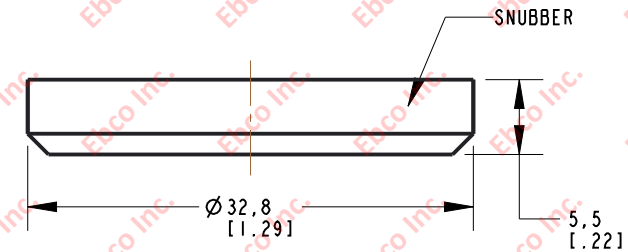

INSTALLATION VIEW (Shown under no load)

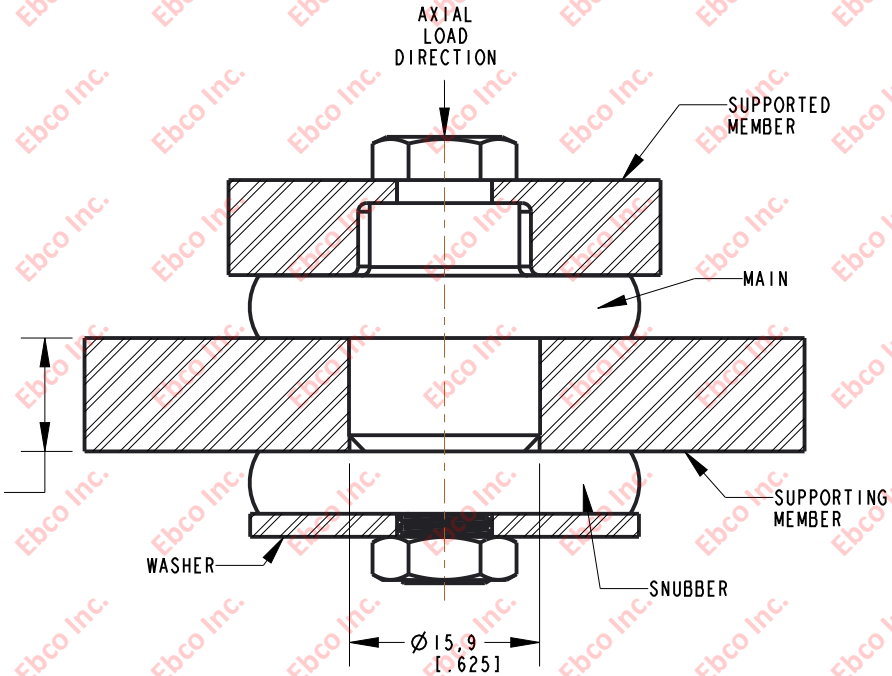

PART NO.	DUROMETER (SHORE A) ±5
NATURAL RUBBER	
2306-75	60

TITLE: 2306

TOLERANCES PER RMA STANDARD A3

REV. E

DATE: 06-09-21

UNITS mm [INCH]

Ebco

1330 HOLMES RD. ELGIN, IL 60123

SPECIFICATIONS SUBJECT TO CHANGE