DWG NO. 2305

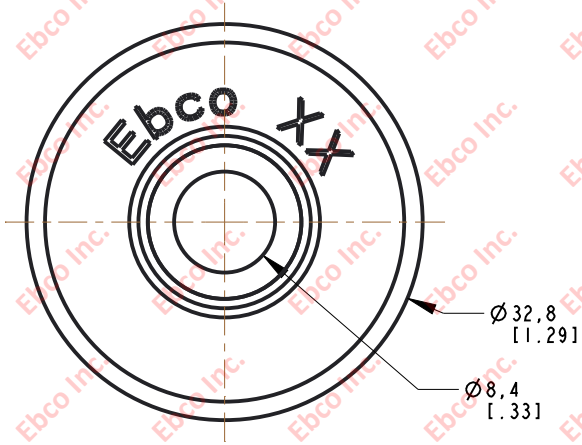

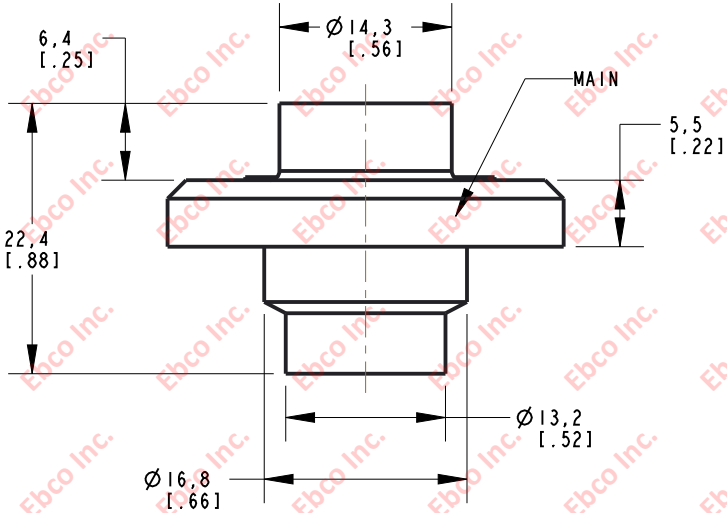

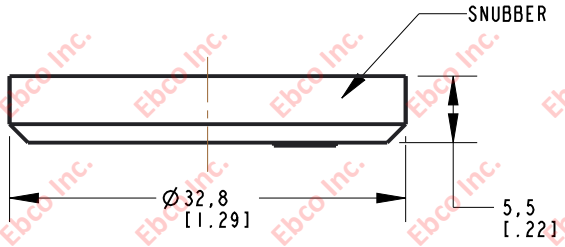

INSTALLATION VIEW (Shown under no load)

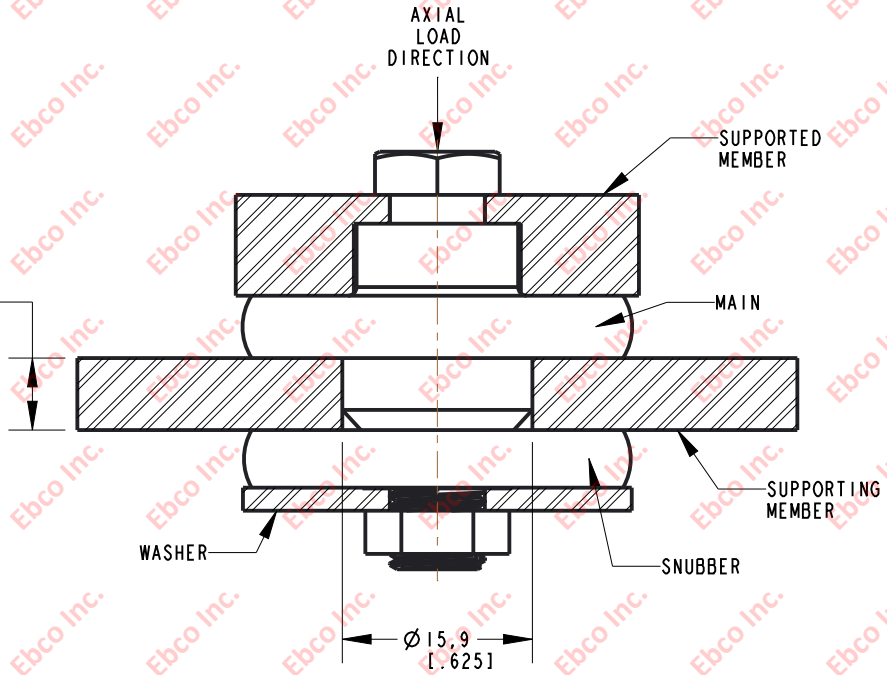

SPECIFICATIONS

PART NUMBER		DUROMETER (SHORE A) ±5
NATURAL RUBBER	NEOPRENE	
2305-73	2305-83	50
2305-74	2305-84	55
2305-75	2305-85	60

Ebco

TITLE: 2305

THE INFORMATION CONTAINED IN THIS DRAWING IS THE SOLE PROPERTY OF EBCO ANY REPRODUCTION IN PART OR AS A WHOLE WITHOUT THE WRITEN PERMISSION OF EBCO IS PROHIBITED.

TOLERANCES PER RMA STANDARD A3

REV. B

DATE: 06-08-21

UNITS mm [INCH]

1330 HOLMES RD. ELGIN, IL 60123

SPECIFICATIONS SUBJECT TO CHANGE

Ebco Inc.