1840

DWG NO.

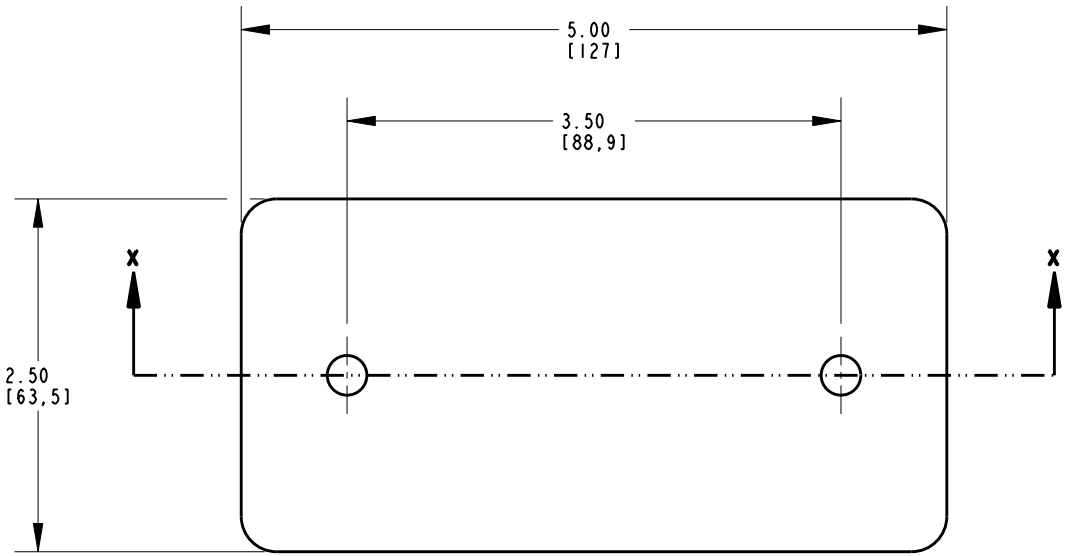

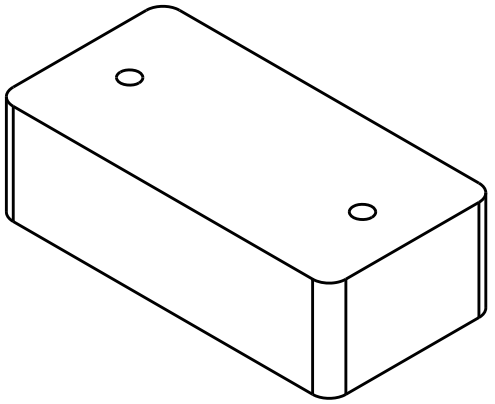

SCALE 0.500

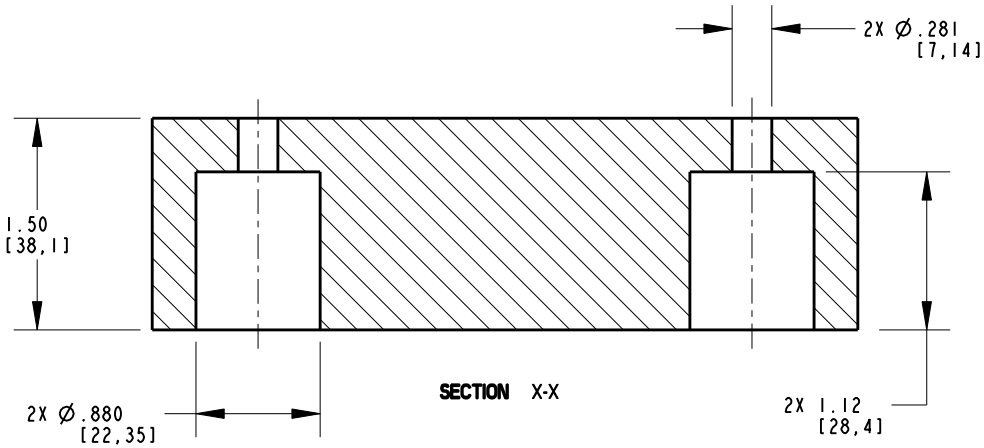

SECTION X-X

*AVAILABLE IN A VARIETY OF MATERIALS AND STIFFNESS

Ebco

TITLE: 1840

THE INFORMATION CONTAINED IN THIS DRAWING IS THE SOLE PROPERTY OF EBCO ANY REPRODUCTION IN PART OR AS A WHOLE WITHOUT THE WRITEN PERMISSION OF EBCO IS PROHIBITED.

TOLERANCES PER RMA STANDARD A3

REV. A

DATE: 06-18-12

UNITS INCH [MM]

1330 HOLMES RD. ELGIN, IL 60123