DWG NO. ERS140

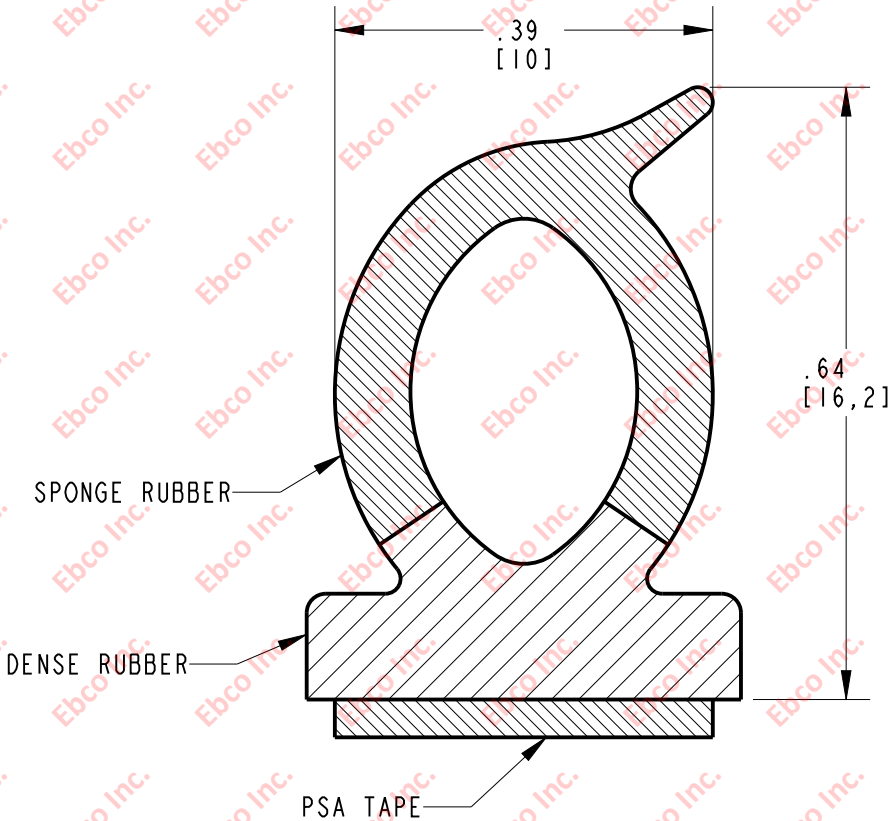

MATERIAL: DENSE AND SPONGE EPDM

TITLE:	ERS140
	THE INFORMATION CONTAINED IN THIS DRAWING IS THE SOLE PROPERTY OF EBCO ANY REPRODUCTION IN PART OR AS A WHOLE WITHOUT THE WRITEN PERMISSION OF EBCO IS PROHIBITED.
TOLERANCES PER RMA STANDARD E3 & BEC2	REV. A / DATE: 06-12-20 / UNITS INCH [MM]
Ebco	1330 HOLMES RD. ELGIN, IL 60123
SPECIFICATIONS SUBJECT TO CHANGE	

Ebco Inc.